ORDER FORM OF NONSTANDARD CABINS

EVO DW+S

SHOP. .....
ADDRESS.....
PN. .....
CUSTOMER PN. .....

☐ ORDER ☐ INQUIRY

MOUNTING:

☐ ON SHOWER TRAY(A1,A2)

WITHOUT SHOWER TRAY:

☐ WITH DIMENSIONS X1,X2

☐ WITH DIMENSIONS Y1,Y2

DIMENSION A1/X1/Y1 .....
(front) (A1 from 750 to 1200mm)
(X1 from 737 to 1187mm)
(Y1 from 733 to 1183mm)

DIMENSION A2/X2/Y2 .....
(fix wall) (from 300 to 1000mm)

HEIGHT ☐ 2000mm (standard)

☐ ..... (other - from 1500 to 2000mm)

DEMONSTRATIVE DRAWINGS

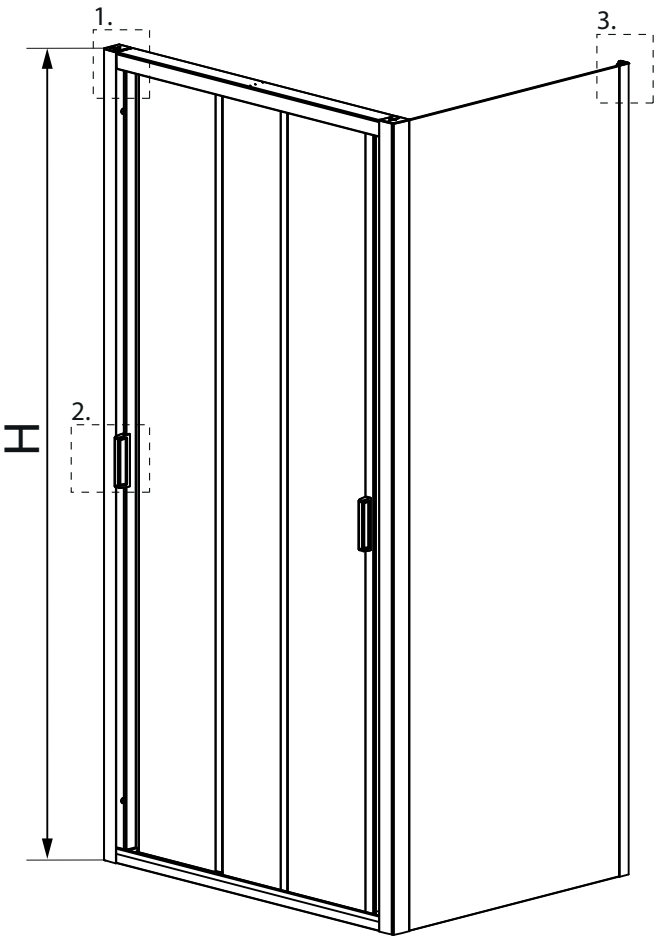

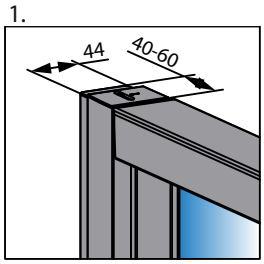

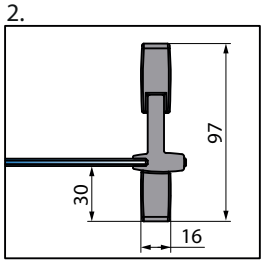

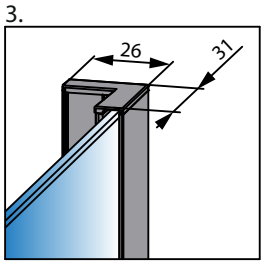

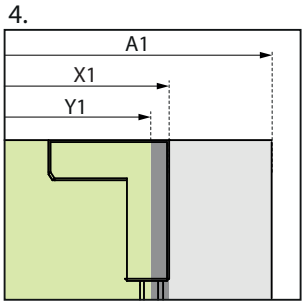

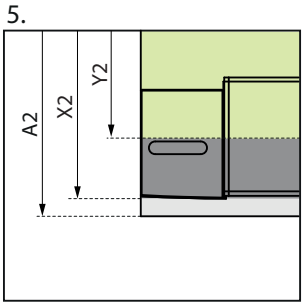

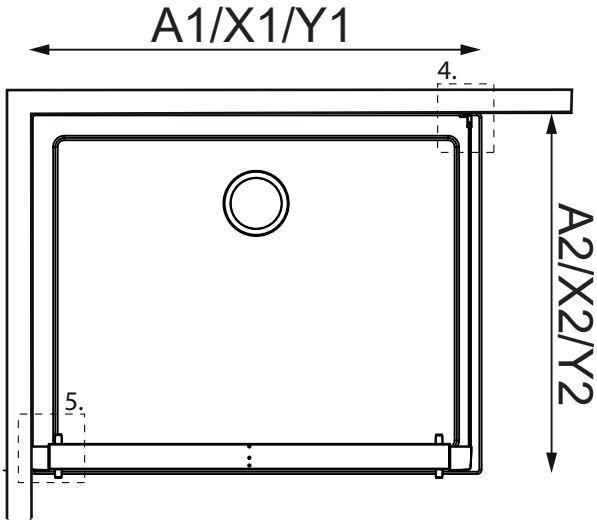

RADAWAY Sp. z o.o. ul. Rabowicka 59, Jasin, 62-020 Swarzędz, Polska
tel. +48 61 835 75 10 fax +48 61 835 75 11, email: office@radaway.pl, www.radaway.pl