radaway

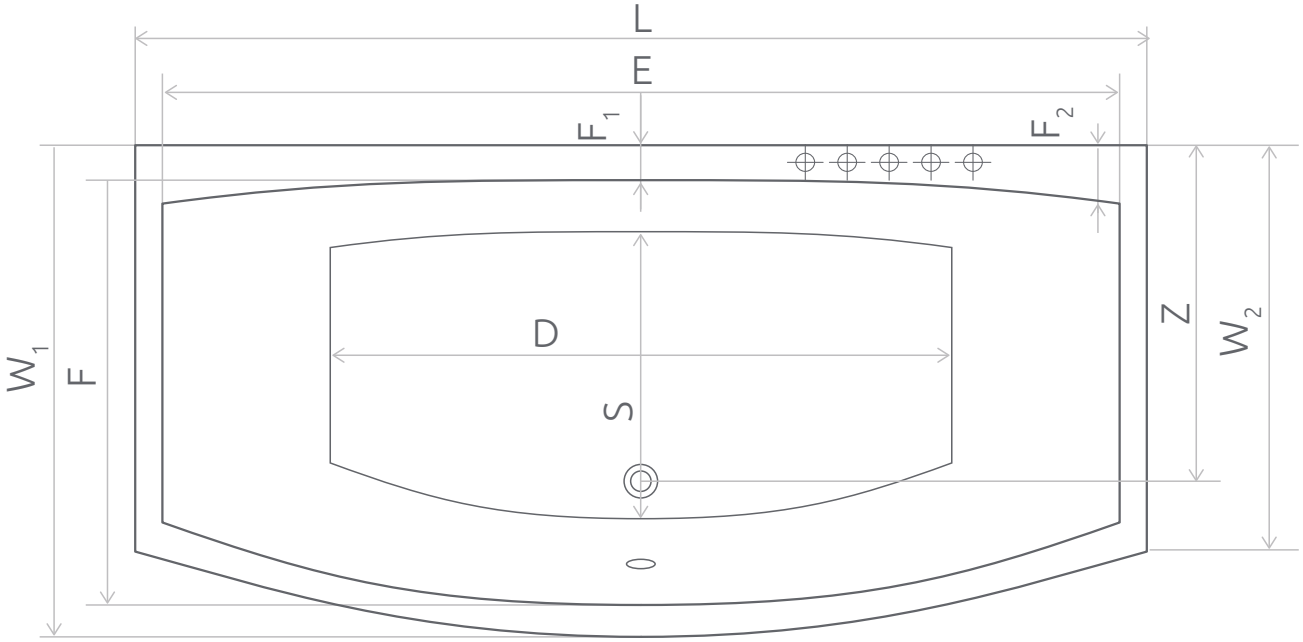

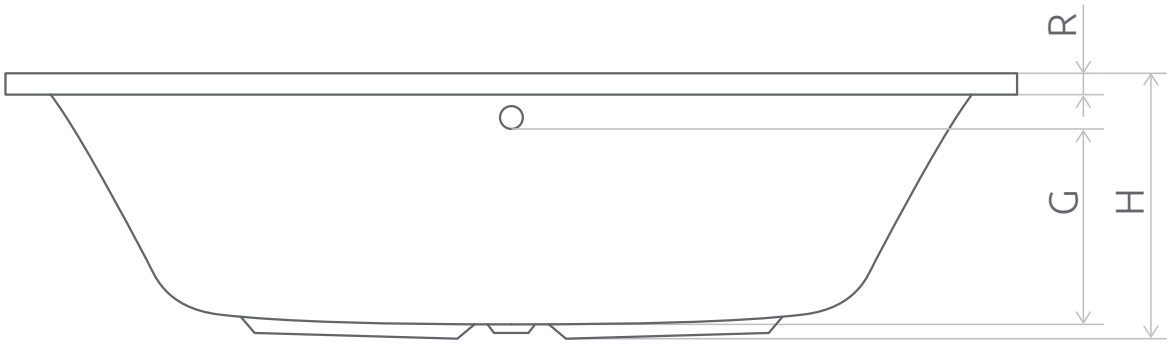

	L	W_1	W_2	H	G	D	R	S	E	F	F_1	F_2	Z	V
190x90	1900	920	750	510	380	1250	40	610	1770	770	75	95	645	330