Anti-slip surface.

Model	Art. No.
ZANTOS C 80×80	M3ZNC8080-06
ZANTOS C 90×90	M3ZNC9090-06

ZANTOS C

To be installed on floor (without legs), siphon outlet Ø 90 mm, recommended siphons TB90, TB21, TBXS, R500, R580, R510, 690 P, R400 SLIM, R400W SLIM.

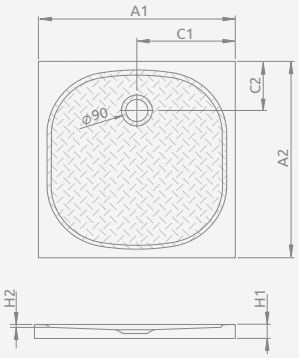

ZANTOS C	A1	A2	C1	C2	H1	H2
80×80	800	800	400	200	32	10
90×90	900	900	450	200	32	10

Model	Art. No.
GIAROS C 90×90	MKGC9090-03
GIAROS C 100×100	M3GRC1010

GIAROS C

To be installed on floor, siphon outlet Ø 50 mm, recommended siphon 5SL1.

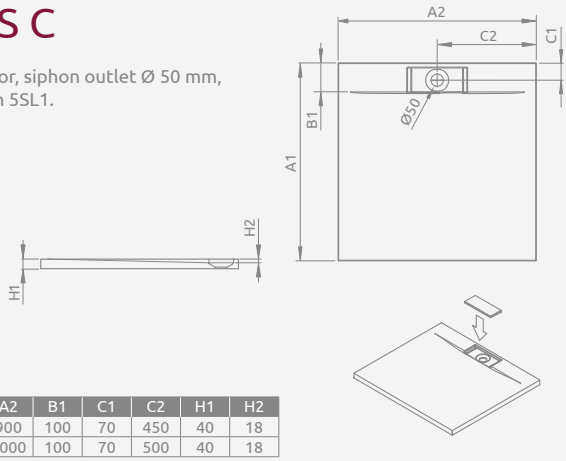

GIAROS C	A1	A2	B1	C1	C2	H1	H2
90×90	900	900	100	70	450	40	18
100×100	1000	1000	100	70	500	40	18

Model	Art. No.
DOROS PLUS C 80×80	SDRPC8080-01
DOROS PLUS C 90×90	SDRPC9090-01
DOROS PLUS C 100×100	SDRPC1010-01

DOROS PLUS C

To be installed on floor (without legs), siphon outlet Ø 90 mm, recommended siphons TB90, TB21, TBXS, R500, R580, R510, 690 P, R400 SLIM, R400W SLIM.

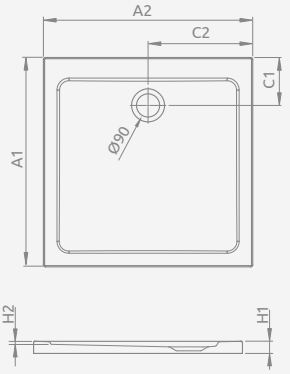

DOROS PLUS C	A1	A2	C1	C2	H1	H2
80×80	800	800	205	400	40	12
90×90	900	900	205	450	40	12
100×100	1000	1000	205	500	45	12

Dimensions are given in mm.

acrylic shower trays

acrylic shower trays on a polystyrene base