578 P

Pop-up siphon („click-clack" type) with self-cleaning trap for shower trays with Ø 50 mm hole; plug and waste in brass chrome finish, plug diameter – 70 mm; 135° multi-directional connector angle; outlet Ø 40/50 mm.

Hole: ∅ **50 mm**
Cover: ∅ **70 mm**
Outlet: ∅ **40/50 mm**
Flat: **97 mm**
Outflow: **40 l/min.**

Art. No.: **578P**

Clik-Clak

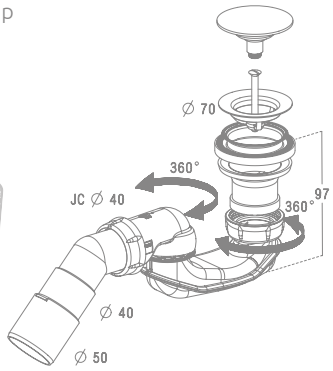

50 mm

5SL1

Siphon for shower trays Giaros with Ø 50 mm hole; very high flow rate; 135° multi-directional connector angle; outlet Ø 40/50 mm; flat – 80 mm.

Hole: ∅ **50 mm**
Outlet: ∅ **40/50 mm**
Flat: **80 mm**
Outflow: **30 l/min.**

Art. No.: **5SL1**

For Giaros shower trays

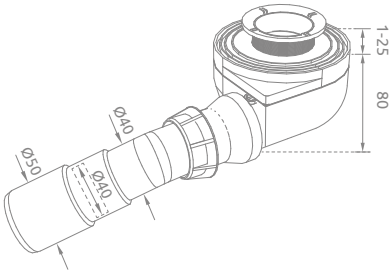

50 mm

B602R

Pop-up siphon („click-clack" type) with overflow and self-cleaning trap for deep shower trays and bathtubes with Ø 50 mm hole; plug and waste in brass chrome finish, plug diameter – 70 mm; 135° multi-directional connector angle; overflow length – 500 mm; overflow tube connected without screwing; outlet Ø 40/50 mm.

Hole: ∅ **50 mm**
Cover: ∅ **70 mm**
Outlet: ∅ **40/50 mm**
Pipe: **500 mm**
Flat: **108 lub 124 mm**
Outflow: **54 l/min.**

Art. No.: **B602R**

Clik-Clak with overflow

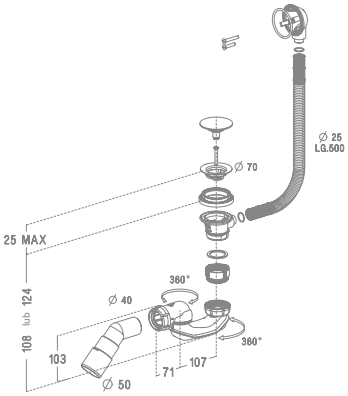

50 mm

R135L

Click-clack siphon with overfl ow. Waste is made from brass in chrome fi nish. Plug diameter – 70 mm. Outlet – 40/50 mm. For deep shower trays with Ø 50 hole. A

Hole: ∅ **50 mm**
Cover: ∅ **70 mm**
Outlet: ∅ **40/50 mm**

Art. No.: **R135L**

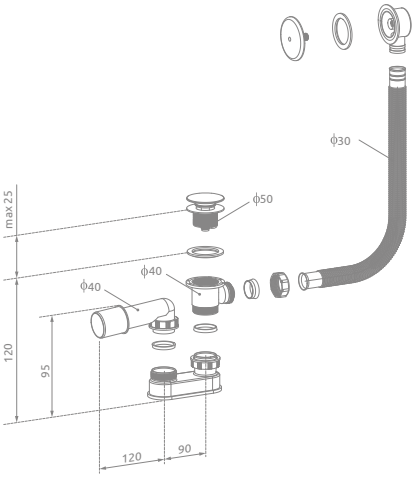

50 mm

Dimensions are given in mm.